REVISIONS					
ZONE	LTR	ECN NO.	DESCRIPTION	DATE	APPROVED
	A	52352BD -001	SEE ECN SPEC. TEXT CHANGE	10-13-06	HB

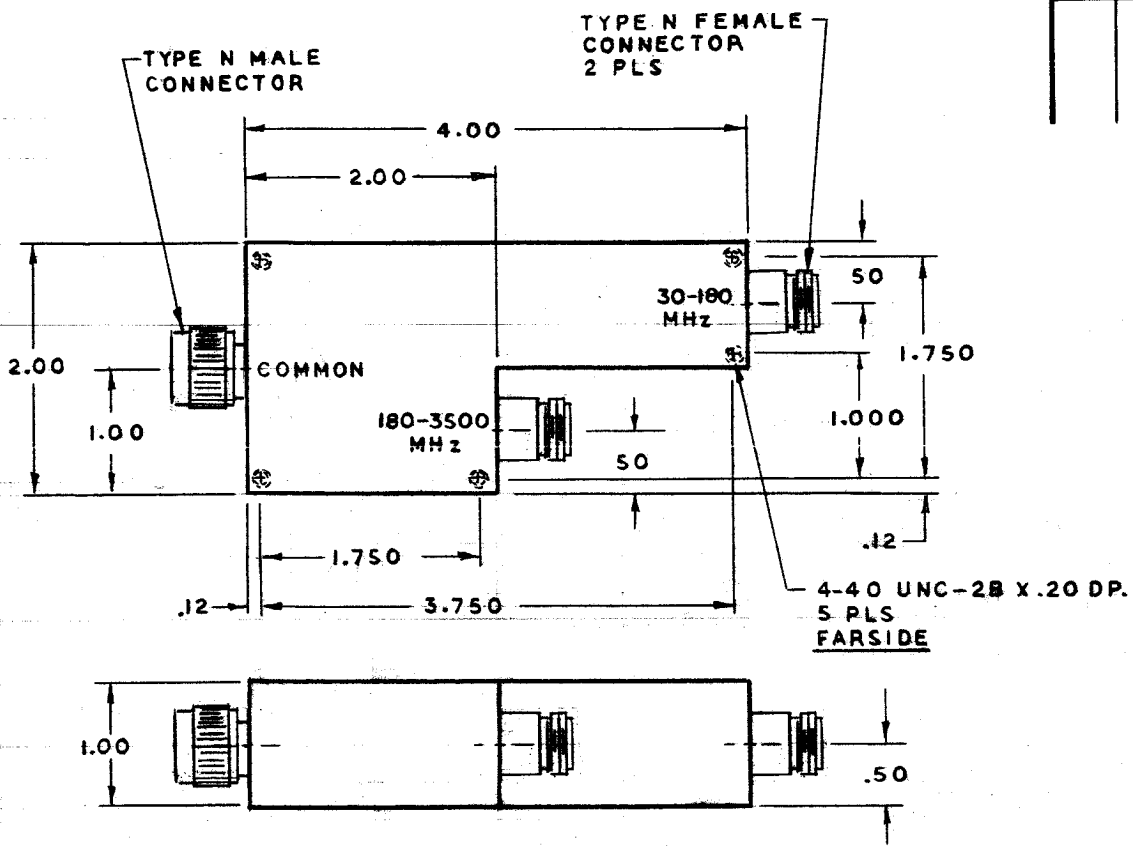

P/N: 52352BD
Low Channel
Type: Bandpass filter
Minimum -4 dBc passband: 30-177 MHz
Maximum loss from 177 to 183 MHz: -7 dB (crossover region)
Maximum 2.3 dB loss: 30-170 MHz (1.0 dB typical)
Maximum 1.7 VSWR: 30-177 MHz (1.5 VSWR typical)
Maximum 2.0 VSWR: 177-3000 MHz
Minimum -50 dBc rejection: DC-15, 220-550 MHz
Minimum -55 dBc rejection: 550-3000 MHz

High Channel
Type: High Pass Filter
Minimum -4 dBc passband: 183-3000 MHz
Maximum loss from 177 to 183 MHz: -7 dB (crossover region)
Maximum 2.0 dB loss: 200-2300 MHz (0.75 dB typical)
Maximum 2.5 dB loss: 2300-2750 MHz
Maximum 3.5 dB loss: 2750-2850 MHz
Maximum 4.5 dB loss: 2850-3000 MHz
Maximum 1.7 VSWR: 200-2500 MHz (1.5 VSWR typical)
Maximum 2.0 VSWR: 30-200 MHz, 2500-3000 MHz
Minimum -50 dBc rejection: DC-150 MHz

Operating power level: at least +33 dBm continuous
Temperature range: -55 to +85 C
Other environmental: typical MIL (filter is gross leak sealed)

FINISH:
MICROWAVE SILVER PLATE PER QQ-365, AND GRAY EPOXY POLYAMIDE PAINT PER MIL-C-22750E.

NEXT ASSY	USED ON

UNLESS OTHERWISE SPECIFIED: DIMENSIONS ARE IN INCHES AND INCLUDE FINISH. TOLERANCES ARE: FRACTIONS ± 1/64 DECIMALS .XX ± .01 .XXX ± .005 ANGLES ± 0°15' SURFACE FINISH 63 CONCENTRICITY .004 TIR

PROPRIETARY DOCUMENT
THIS DRAWING AND/OR INFORMATION OR SUBJECT MATTER CONTAINED HEREIN SHALL NOT BE USED, COPIED OR DISSEMINATED IN ANY MANNER, OR FOR ANY PURPOSE, OTHER THAN AS EXPRESSLY STATED BY RS MICROWAVE COMPANY INC

	SIGNED	DATE
DRAWN	HB	8-25-05
CHECKED	EG	10/21/05
E E APP'D		
M E APP'D	EG	10/26/05
Q A APP'D	HB	8-25-05
JOB NO.		

RS MICROWAVE COMPANY, INC.
22 PARK PLACE, P.O. BOX 273 BUTLER, NEW JERSEY 07405
201-492-1207 FSCM 61453

TITLE OUTLINE

SIZE	CODE IDENT. NO.	DWG. NO.	REV.
B	61453	52352BD	A

SCALE FULL SHEET OF

NORTH JERSEY COPY N133571