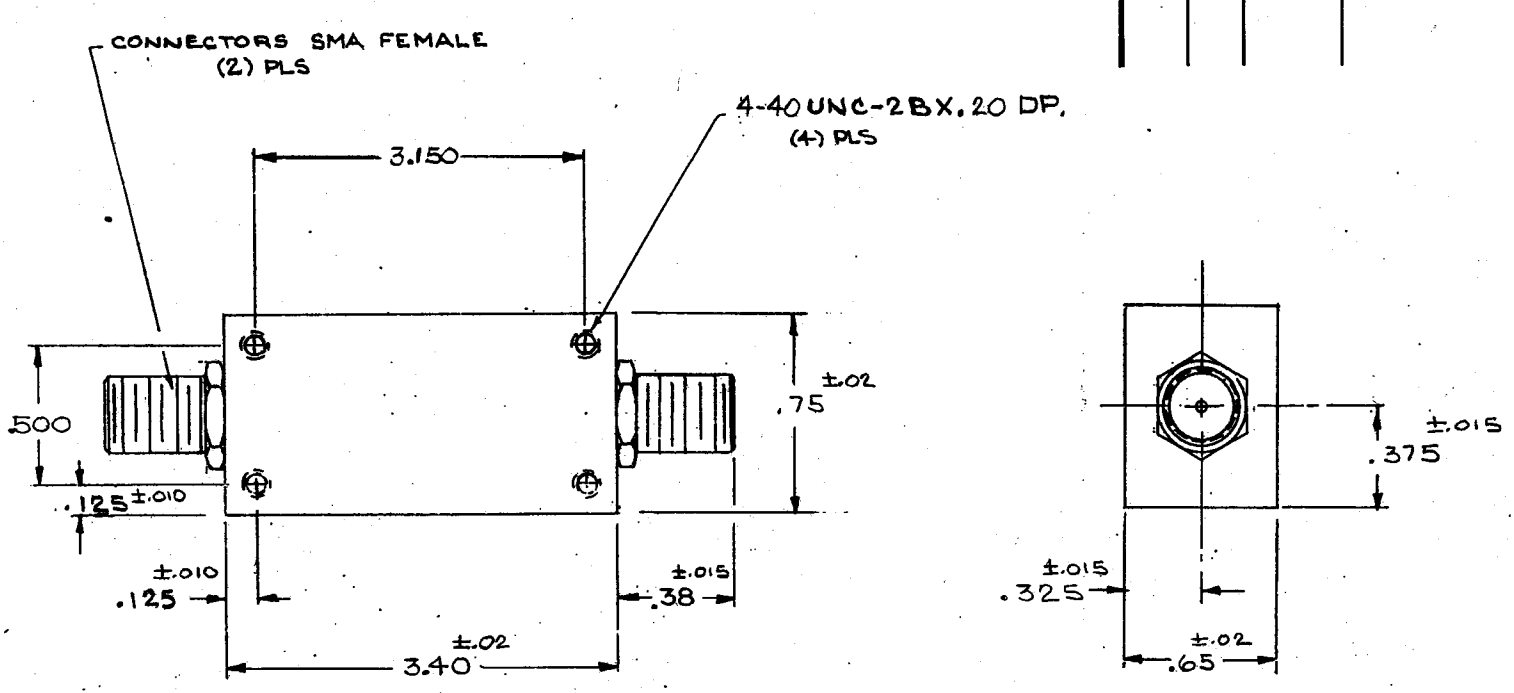
CONNECTORS SMA FEMALE
(2) PLS
4-40 UNC-2BX.20 DP,
(4) PLS
3.150
.500
.125 ±.010
±.02
.75
±.010
.125
±.015
.38
±.02
3.40
±.015
.375
±.015
.325
±.02
.65